WIRE DIAGRAM OF INMOTION SERIES 310 1/Both/2:

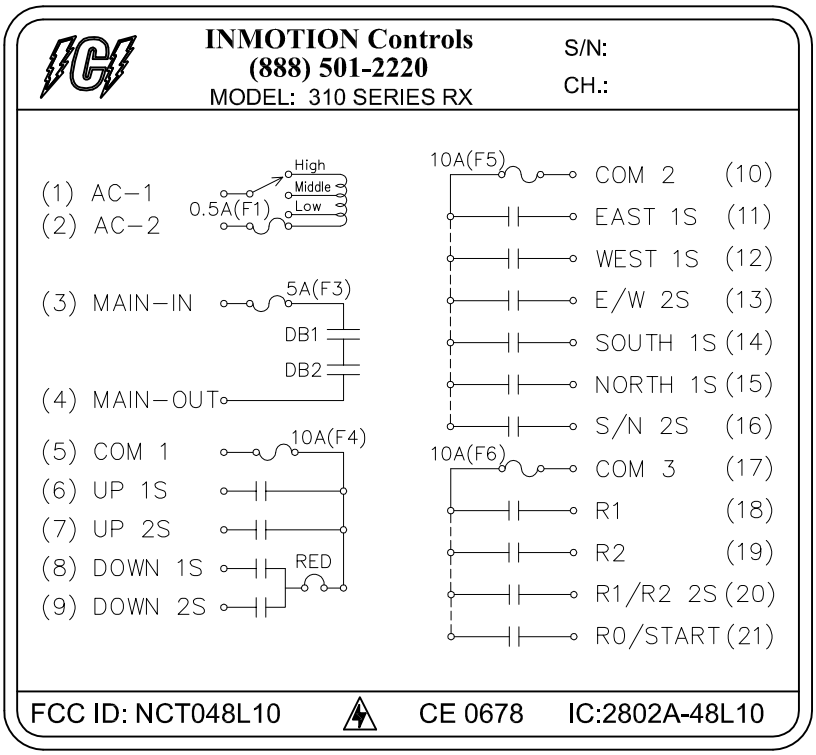

INMOTION 310 1/Both/2

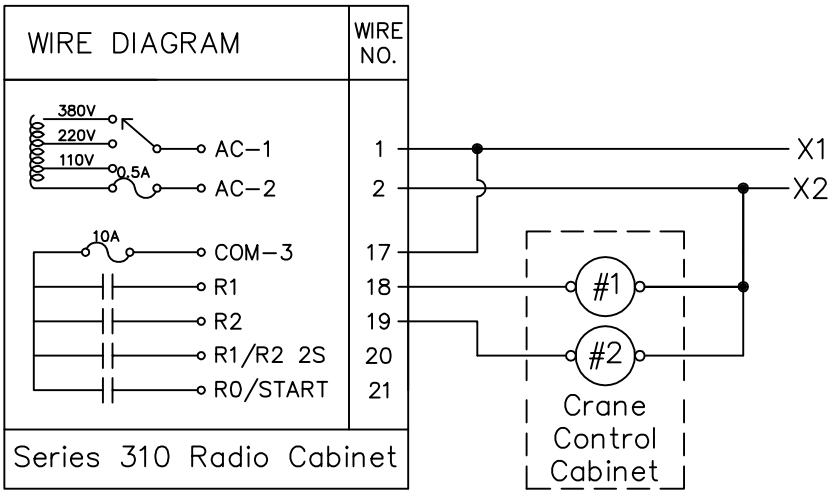

INMOTION 310 1/Both/2 Option

1. System must be programmed for this option.
2. Connect wire # 17 to X1.
3. Connect wire # 18 to relay coil of selector relay #1.
4. Connect wire # 19 to relay coil of selector relay #2.

NOTE: INMOTION 310-3C & 310-T/H-C Similar.