# INMOTION Controls, Inc.

# 342 Series Wiring Diagram

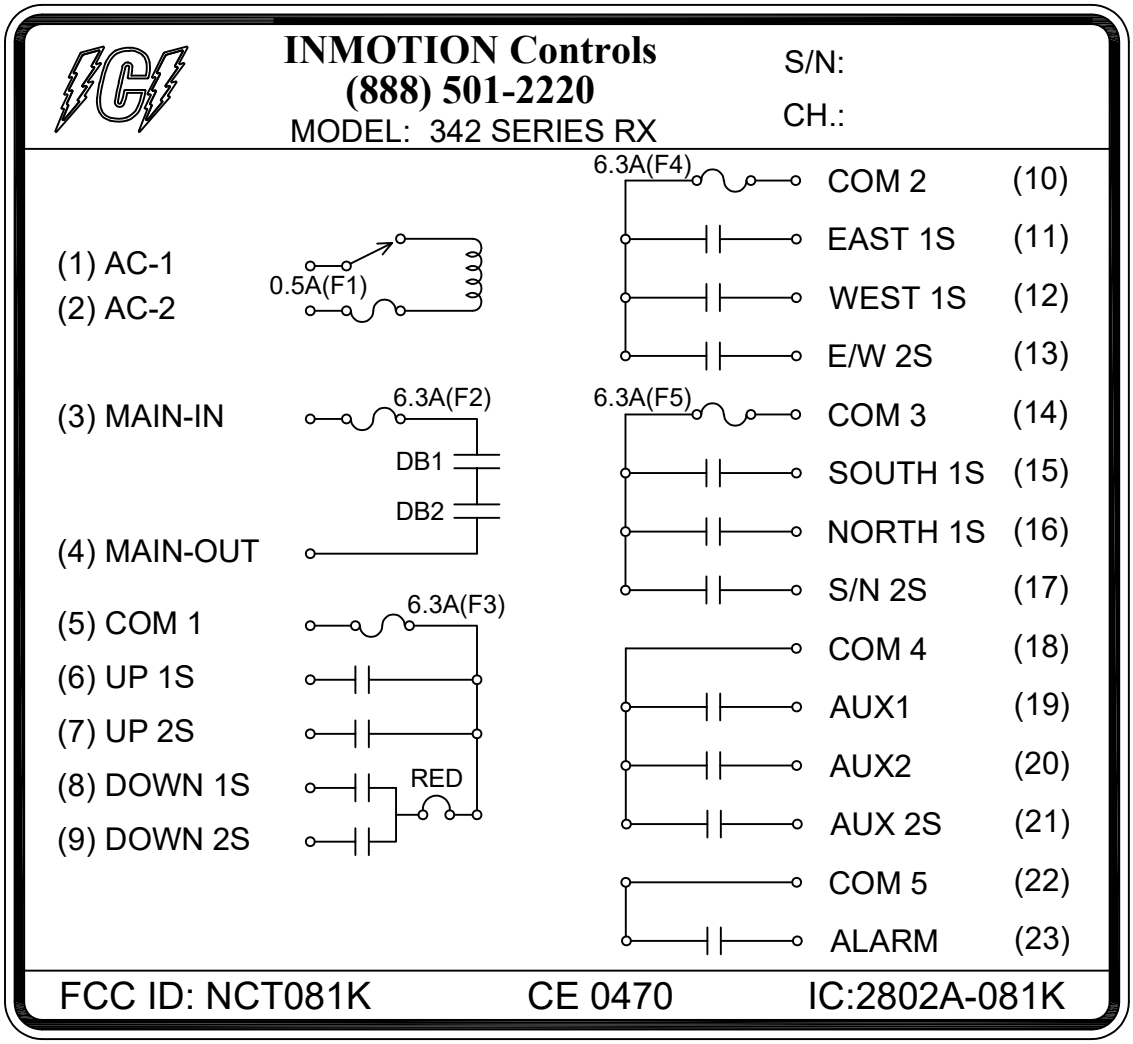


1926 Silver Street, Garland, Texas 75042 • 888-501-2220 • www.inmotioncontrols.com