INMOTION Controls, Inc.

M Series Wiring Diagram
4-Motion, 5-Speed with Magnet (Sample)

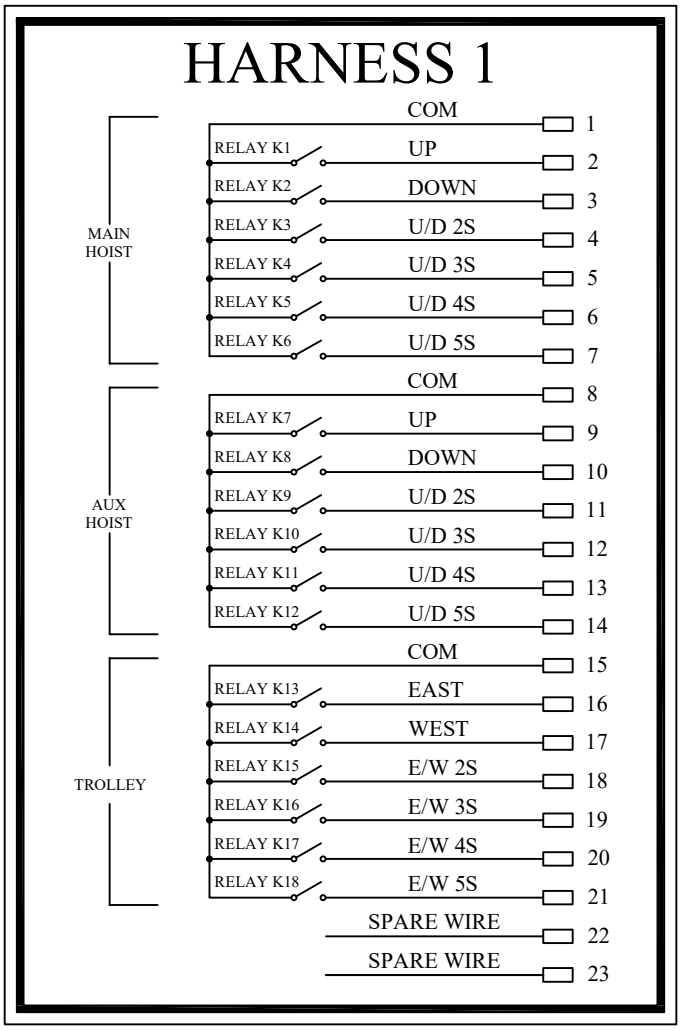

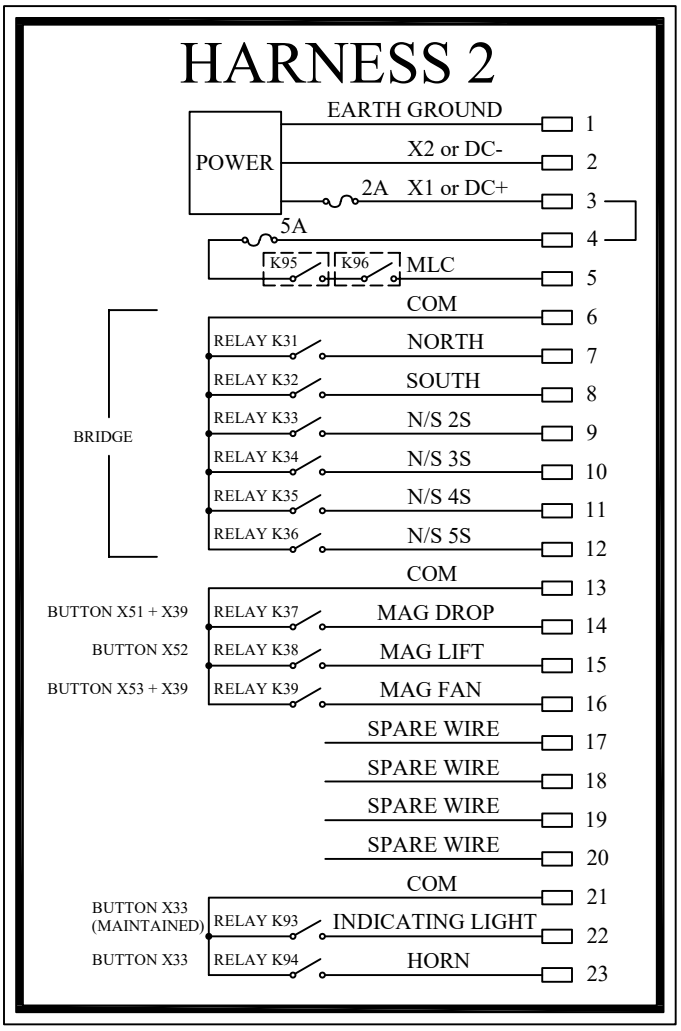

1926 Silver Street, Garland, Texas 75042 • 888-501-2220 • www.inmotioncontrols.com